Cambridge Assessment International Education

Cambridge IGCSE™ (9–1)

CANDIDATE NAME	

CENTRE NUMBER						CANDIDATE NUMBER				

PHYSICS **0972/41**

Paper 4 Theory (Extended) **May/June 2020**

1 hour 15 minutes

You must answer on the question paper.

No additional materials are needed.

INSTRUCTIONS

- Answer **all** questions.
- Use a black or dark blue pen. You may use an HB pencil for any diagrams or graphs.
- Write your name, centre number and candidate number in the boxes at the top of the page.
- Write your answer to each question in the space provided.
- Do **not** use an erasable pen or correction fluid.
- Do **not** write on any bar codes.
- You may use a calculator.
- You should show all your working and use appropriate units.
- Take the weight of 1.0 kg to be 10 N (acceleration of free fall = 10 m/s^2).

INFORMATION

- The total mark for this paper is 80.
- The number of marks for each question or part question is shown in brackets [ ].

This document has **16** pages. Blank pages are indicated.

DC (DH) 199542
© UCLES 2020

[Turn over

www.root19.com +91 - 9969 353 391

1 An aeroplane of mass 2.5×10^5 kg lands with a speed of 62 m/s, on a horizontal runway at time $t = 0$. The aeroplane decelerates uniformly as it travels along the runway in a straight line until it reaches a speed of 6.0 m/s at $t = 35$ s.

(a) Calculate:

(i) the deceleration of the aeroplane in the 35 s after it lands

deceleration = ... [2]

(ii) the resultant force acting on the aeroplane as it decelerates

force = ... [2]

(iii) the momentum of the aeroplane when its speed is 6.0 m/s.

momentum = ... [2]

(b) At $t = 35$ s, the aeroplane stops decelerating and moves along the runway at a constant speed of 6.0 m/s for a further 15 s.

On Fig. 1.1, sketch the shape of the graph for the distance travelled by the aeroplane along the runway between $t = 0$ and $t = 50$ s. You are **not** required to calculate distance values.

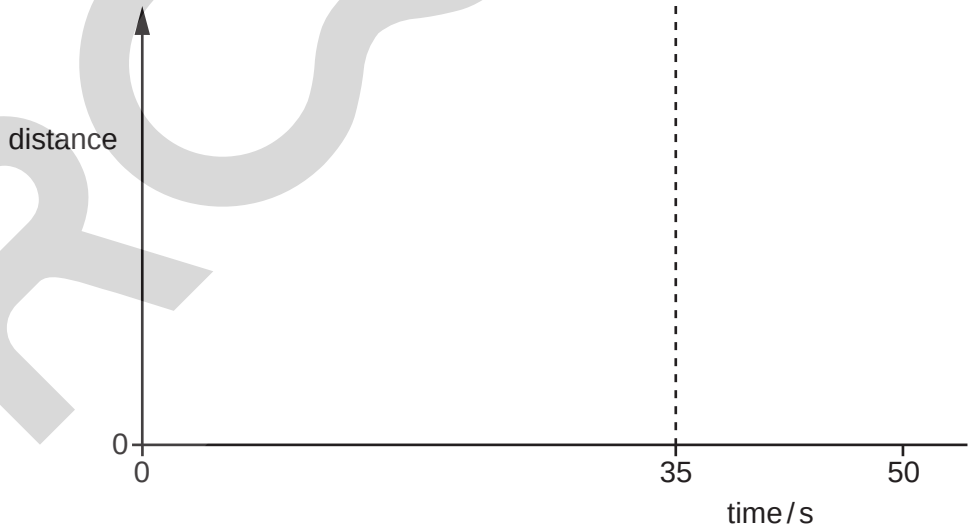

Fig. 1.1

[3]

www.root19.com +91 - 9969 353 391

(c) As the aeroplane decelerates, its kinetic energy decreases.

Suggest what happens to this energy.

.....

..... [1]

[Total: 10]

© UCLES 2020

www.root19.com
+91 - 9969 353 301

2 Fig. 2.1 is the extension–load graph for a light spring S.

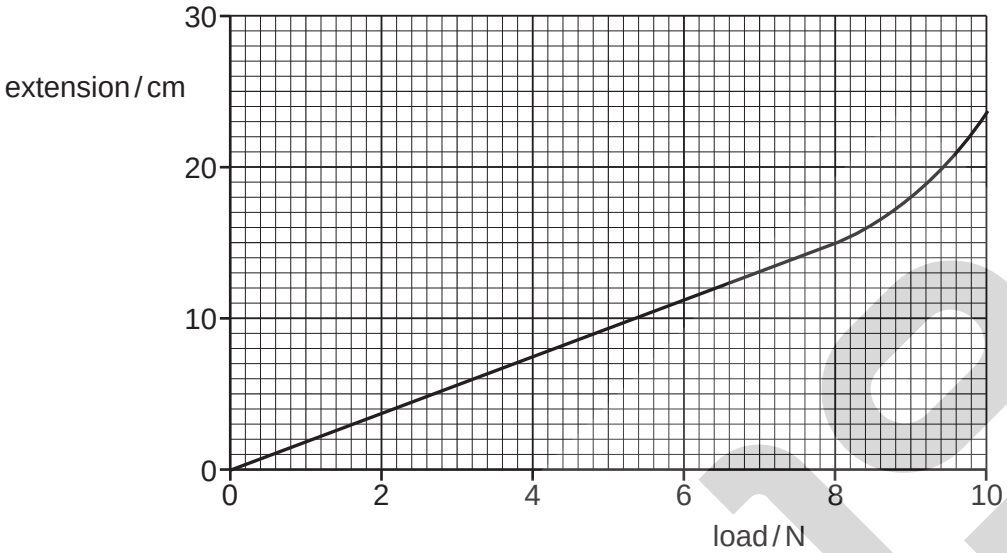

Fig. 2.1

(a) State the range of loads for which S obeys Hooke's law.

from ..... to ..... [1]

(b) Using information from Fig. 2.1, determine the spring constant *k* of spring S.

k = ... [2]

www.root19.com +91 - 9969 353 391

(c) A second spring, identical to spring S, is attached to spring S. The two springs are attached to a rod, as shown in Fig. 2.2. A load of 4.0 N is suspended from the bottom of spring S. The arrangement is in equilibrium.

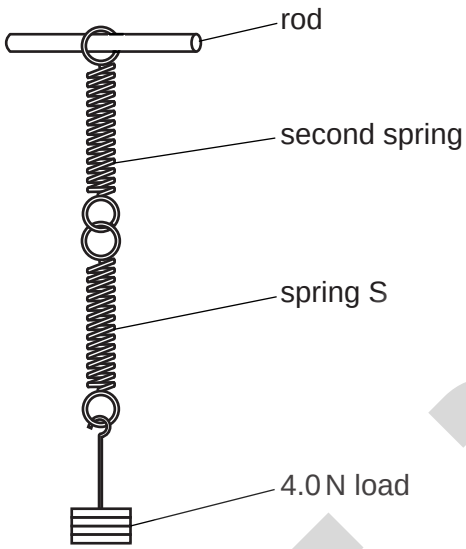

Fig. 2.2

(i) State the name of the form of energy stored in the two springs when they are stretched.

..... [1]

(ii) Determine the extension of the arrangement in Fig. 2.2.

extension = ... cm [1]

(iii) The load is carefully increased to 6.0 N in total.

Calculate the distance moved by the load to the new equilibrium position as the load increases from 4.0 N to 6.0 N.

distance moved = ... [1]

[Total: 6]

www.root19.com +91 - 9969 353 301

3 Fig. 3.1 shows gas trapped in the sealed end of a tube by a dense liquid.

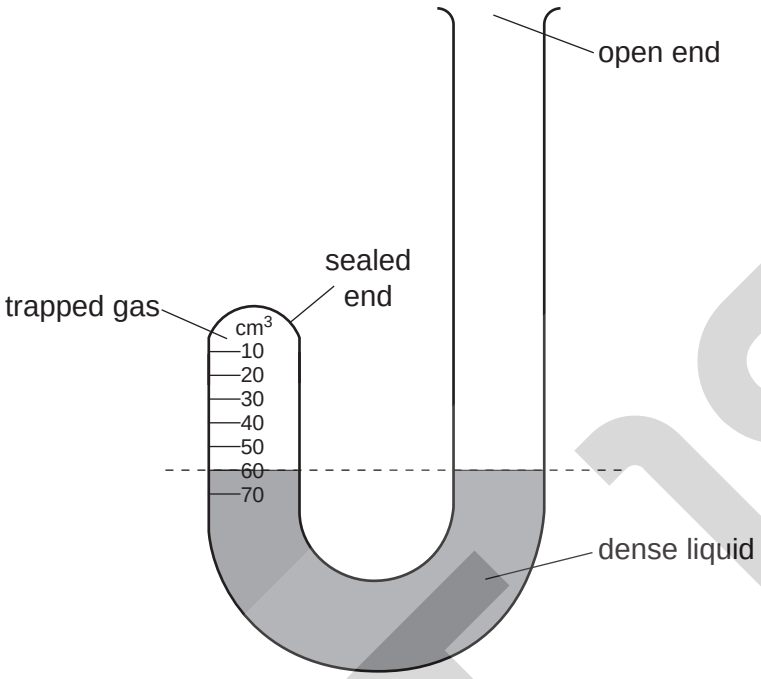

Fig. 3.1

The scale marked on the sealed end of the tube is calibrated to read the volume of gas trapped above the liquid surface. Fig. 3.1 shows that initially the volume V_1 of the gas is 60 cm^3.

The pressure of the atmosphere is 1.0×10^5 Pa.

(a) State how Fig. 3.1 shows that the pressure of the trapped gas is equal to the pressure of the atmosphere.

.....

..... [1]

(b) Explain, in terms of the momentum of its molecules, why the trapped gas exerts a pressure on the walls of the tube.

.....

.....

.....

..... [3]

www.root19.com +91 - 9969 353 391

(c) More of the dense liquid is poured into the open end of the tube. The level of the liquid surface in both the sealed and the open ends of the tube rises as shown in Fig. 3.2. The temperature of the trapped gas and atmospheric pressure both remain constant.

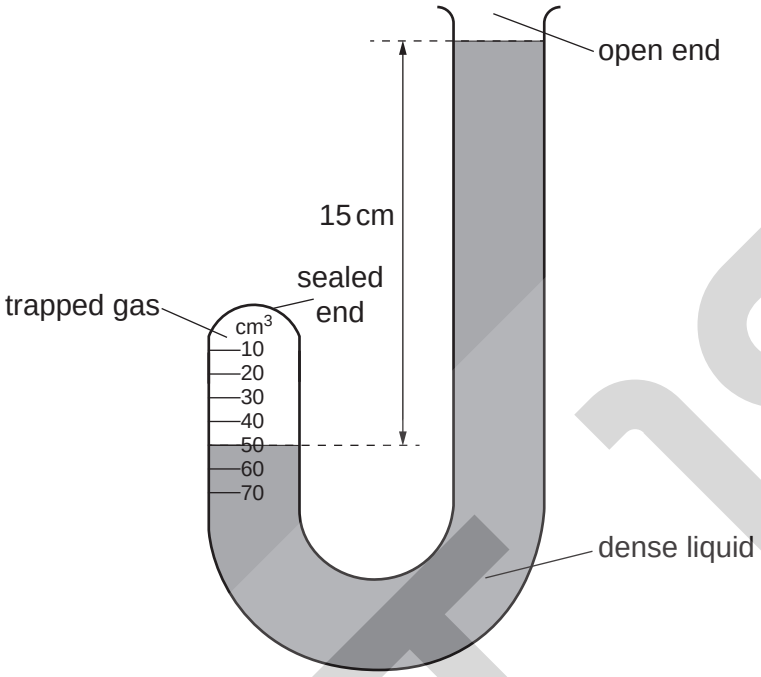

Fig. 3.2

(i) In the sealed end of the tube, the volume V_2 of the trapped gas is 50 cm^3. In the open end of the tube, the liquid surface is 15 cm above the new level in the sealed tube.

Calculate the pressure p_2 of the trapped gas.

pressure p_2 = ... [2]

(ii) Calculate the density of the liquid in the tube.

density = ... [2]

[Total: 8]

www.root19.com +91 - 9969 353 301

4 Water has a specific heat capacity of 4200 J/(kg °C) and a boiling point of 100 °C.

(a) State what is meant by *boiling point*.

.....

..... [1]

(b) A mass of 0.30 kg of water at its boiling point is poured into a copper container which is initially at 11 °C. After a few seconds, the temperature of the container and the water are both 95 °C.

(i) Calculate the energy transferred from the water.

energy transferred = ... [2]

(ii) Calculate the thermal capacity of the copper container.

thermal capacity of the copper container = ... [2]

(iii) Water from the container evaporates and the temperature of the remaining water decreases slowly.

Explain, in terms of molecules, why evaporation causes the temperature of the remaining water to decrease.

.....

.....

.....

..... [3]

[Total: 8]

© UCLES 2020
www.root19.com

+91 - 9969 353 391

5 The distance between the centre of a thin converging lens and each principal focus is 5.0 cm.

(a) Describe what is meant by the term *principal focus* for a thin converging lens.

.....

.....

..... [2]

(b) The lens is used as a magnifying glass to produce an image I of an object O.

(i) Underline the terms that describe the nature of the image produced by a magnifying glass. [2]

diminished **enlarged** **inverted** **real** **same size** **upright** **virtual**

(ii) Fig. 5.1 is a full-scale diagram of the lens and the image I.

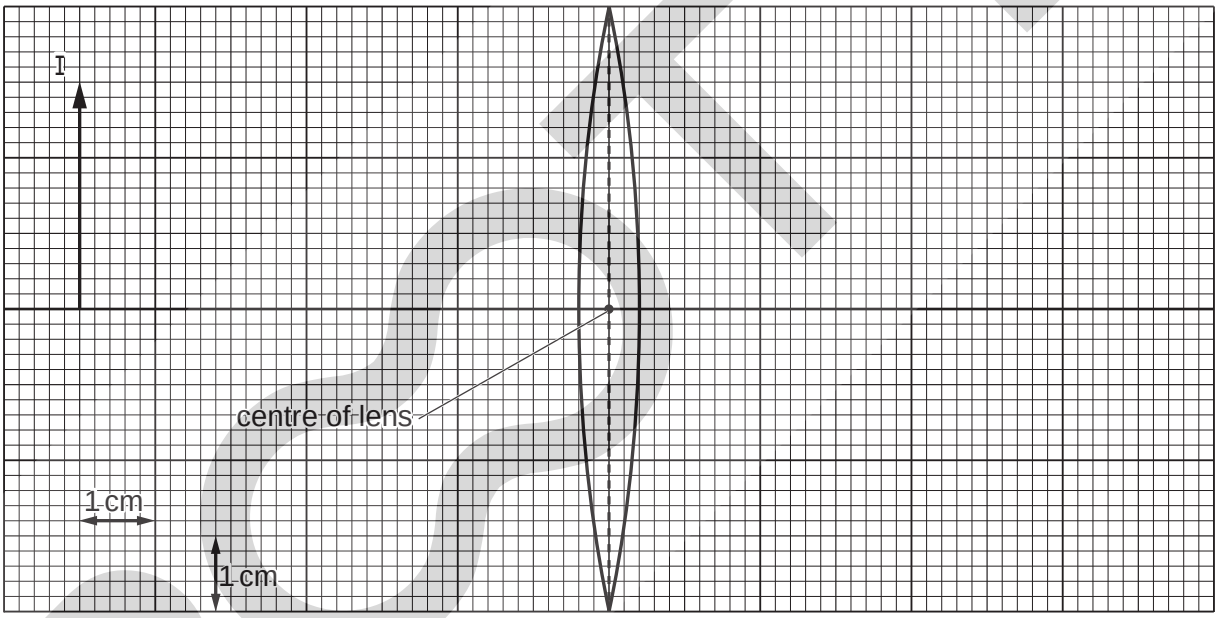

Fig. 5.1 (full-scale)

1. On Fig. 5.1, mark both principal focuses and label each of them F. [1]

2. By drawing on Fig. 5.1, find the position of object O and add object O to the diagram. [3]

(iii) Using Fig. 5.1, determine the distance of object O from the centre of the lens.

distance = ... [1]

[Total: 9]

www.root19.com +91 - 9969 353 301

6 The speed of sound in air is 340 m / s.

(a) Calculate the range of wavelengths for sounds that are audible by a healthy human ear.

wavelengths range from ..... to ..... [2]

(b) Sound waves are longitudinal waves.

Describe how a longitudinal wave differs from a transverse wave.

.....

.....

.....

..... [3]

(c) Fig. 6.1 shows a band in front of a building.

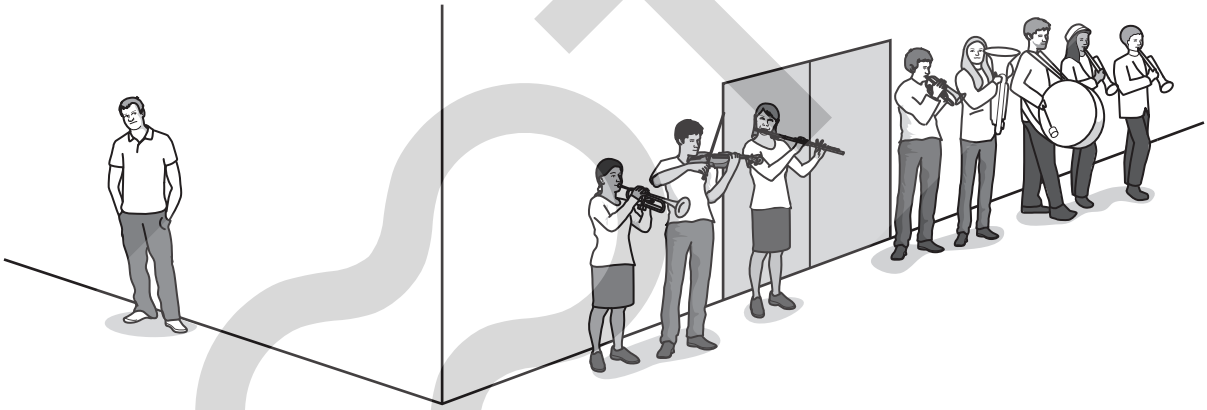

Fig. 6.1

The drum produces a low frequency sound. Other musical instruments produce a high frequency sound. These sounds are equally loud.

A young man at the side of the building hears the drum but not the high frequency sounds from the other musical instruments.

Explain why this happens.

.....

.....

..... [3]

[Total: 8]

www.root19.com +91 - 9969 353 391

7 An electromagnet consists of a solenoid X that is made of copper wire. The solenoid contains an iron core.

(a) Explain why:

(i) the structure of copper makes it a suitable material for the wire

.....

.....

..... [2]

(ii) iron is a suitable material for the core of an electromagnet.

.....

.....

..... [2]

(b) Fig. 7.1 shows the electromagnet inside a second solenoid Y.

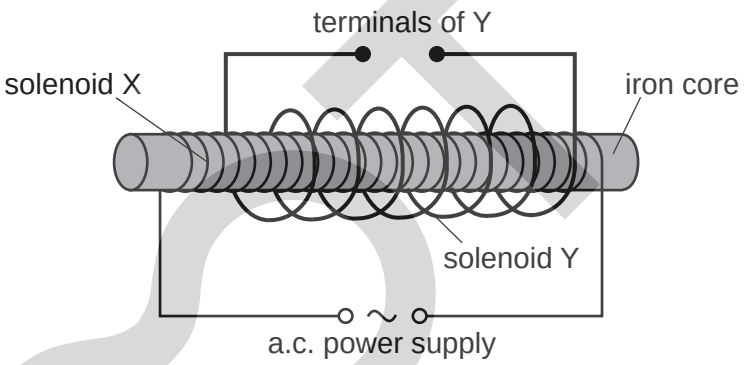

Fig. 7.1

(i) Describe and explain what happens in solenoid Y when solenoid X is connected to an alternating current (a.c.) power supply.

.....

.....

.....

..... [3]

(ii) A switch and a lamp are connected in series with the terminals of solenoid Y. When the switch is closed, the lamp lights up at normal brightness.

Describe and explain what happens to the current in solenoid X when the switch is closed.

.....

.....

..... [2]

[Total: 9]

www.root19.com +91 - 9969 353 301

8 The power supply used in an electric vehicle contains 990 rechargeable cells each of electromotive force (e.m.f.) 1.2 V.

The cells are contained in packs in which all the cells are in series with each other. The e.m.f. of each pack is 54 V.

(a) Calculate the number of packs in the power supply.

number of packs = ... [2]

(b) When in use, each pack supplies a current of 3.5 A.

(i) Calculate the rate at which each cell is transferring chemical energy to electrical energy.

rate of energy transfer = ... [2]

(ii) The packs are connected in parallel to supply a large current to drive the electric vehicle.

Explain why it is necessary to use thick wires to carry this current.

.....

.....

.....

..... [3]

[Total: 7]

© UCLES 2020
www.root19.com

+91 - 9969 353 391

9 **(a)** Describe how a digital signal differs from an analogue signal. You may draw a diagram.

.....

.....

..... [2]

(b) **(i)** In the appropriate box, draw the symbol for an AND gate and the symbol for an OR gate.

AND gate	OR gate

[1]

(ii) State how the behaviour of an AND gate differs from that of an OR gate.

.....

..... [1]

© UCLES 2020
www.root19.com

+91 - 9969 353 301

(c) An arrangement of logic gates A, B and C is shown in Fig. 9.1. The arrangement has two inputs, X and Y and two outputs P and Q.

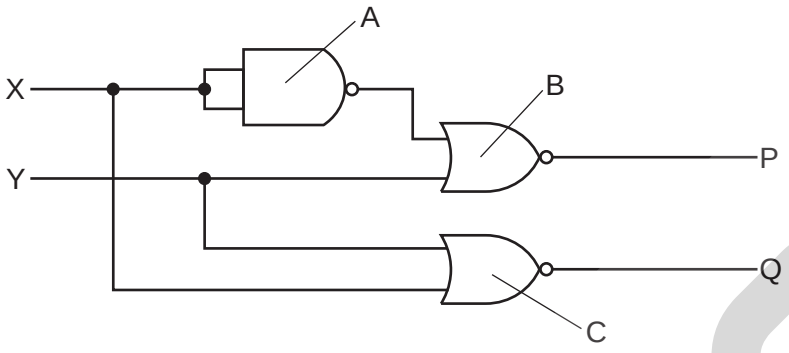

Fig. 9.1

Output P of logic gate B has logic state 1 (high).

(i) Determine the logic states of the two inputs of logic gate B.

upper input = ...

lower input = ...
[1]

(ii) Determine and explain the logic state of output Q.

.....

.....

.....

.....

logic state of Q = ... [3]

[Total: 8]

www.root19.com +91 - 9969 353 391

10 Fig. 10.1 represents a neutral atom of an isotope of element X.

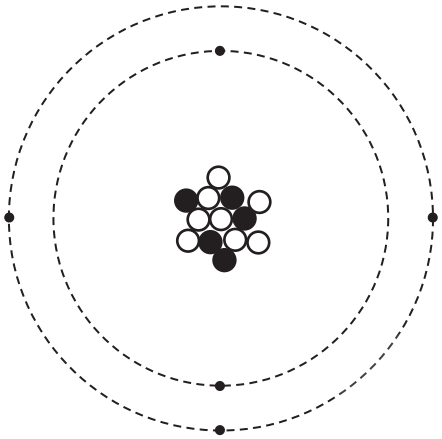

Fig. 10.1

(a) State **one** similarity between this atom and a neutral atom of a different isotope of element X.

.....

..... [1]

(b) The isotope of element X is radioactive. It decays to form an isotope of element Y by emitting a β-particle.

(i) Using Fig. 10.1 deduce the nuclide notation for the isotope of Y produced by this decay.

nuclide notation: $^{\ldots\ldots}_{\ldots\ldots}Y$ [3]

(ii) β-particles ionise the air they pass through less strongly than the same number of α-particles.

Suggest why this is so.

.....

.....

..... [3]

[Total: 7]

© UCLES 2020
www.root19.com

+91 - 9969 353 391

BLANK PAGE

Permission to reproduce items where third-party owned material protected by copyright is included has been sought and cleared where possible. Every reasonable effort has been made by the publisher (UCLES) to trace copyright holders, but if any items requiring clearance have unwittingly been included, the publisher will be pleased to make amends at the earliest possible opportunity.

To avoid the issue of disclosure of answer-related information to candidates, all copyright acknowledgements are reproduced online in the Cambridge Assessment International Education Copyright Acknowledgements Booklet. This is produced for each series of examinations and is freely available to download at www.cambridgeinternational.org after the live examination series.

Cambridge Assessment International Education is part of the Cambridge Assessment Group. Cambridge Assessment is the brand name of the University of Cambridge Local Examinations Syndicate (UCLES), which itself is a department of the University of Cambridge.

www.root19.com +91 - 9969 353 391